MBE 9A8
6 Zylinder COP 1-5-3-6-2-4

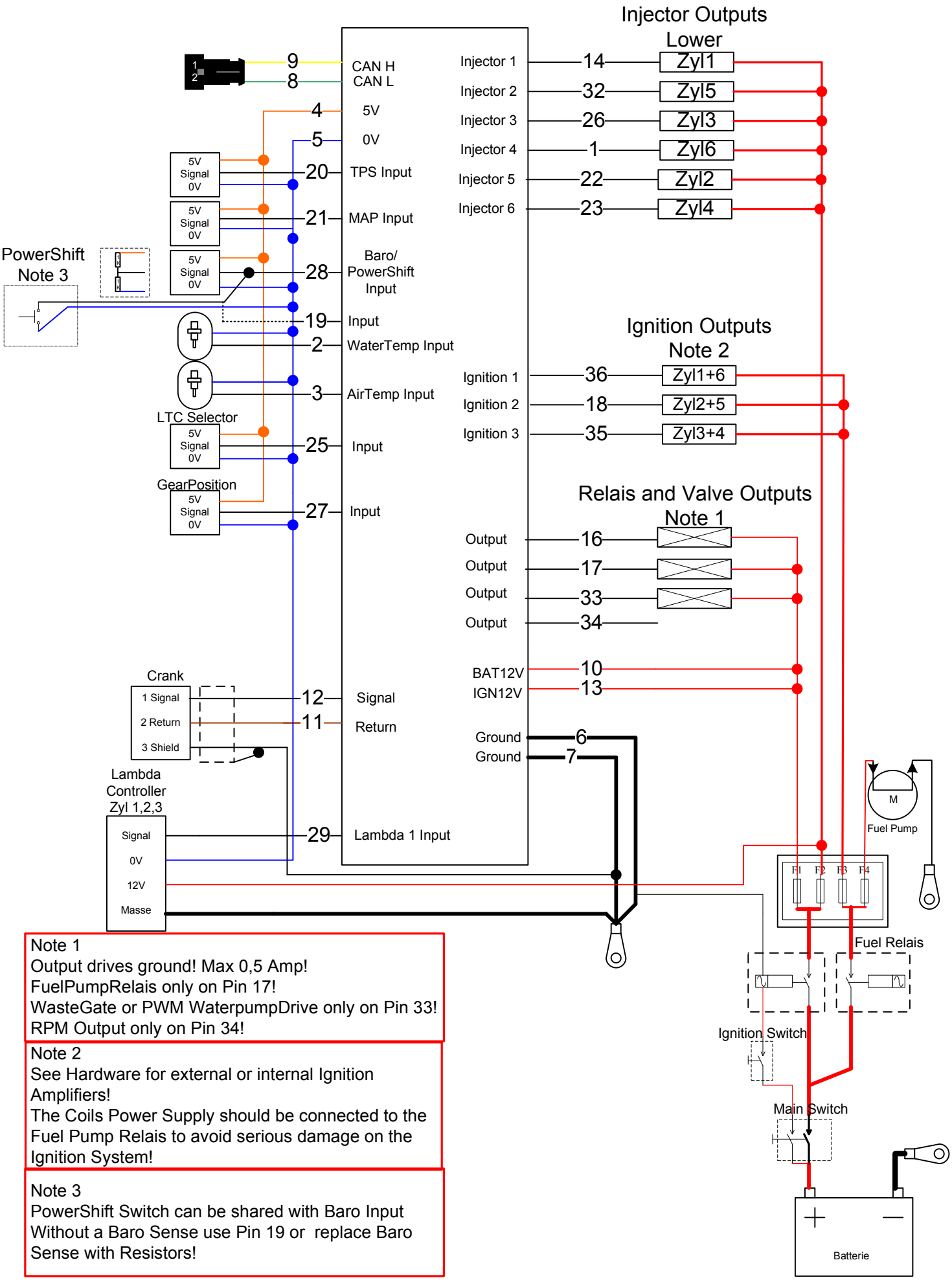

Note 1
Output drives ground! Max 0,5 Amp!
FuelPumpRelais only on Pin 17!
WasteGate or PWM WaterpumpDrive only on Pin 33!
RPM Output only on Pin 34!

Note 2
See Hardware for external or internal Ignition Amplifiers!
The Coils Power Supply should be connected to the Fuel Pump Relais to avoid serious damage on the Ignition System!

Note 3
PowerShift Switch can be shared with Baro Input
Without a Baro Sense use Pin 19 or replace Baro Sense with Resistors!