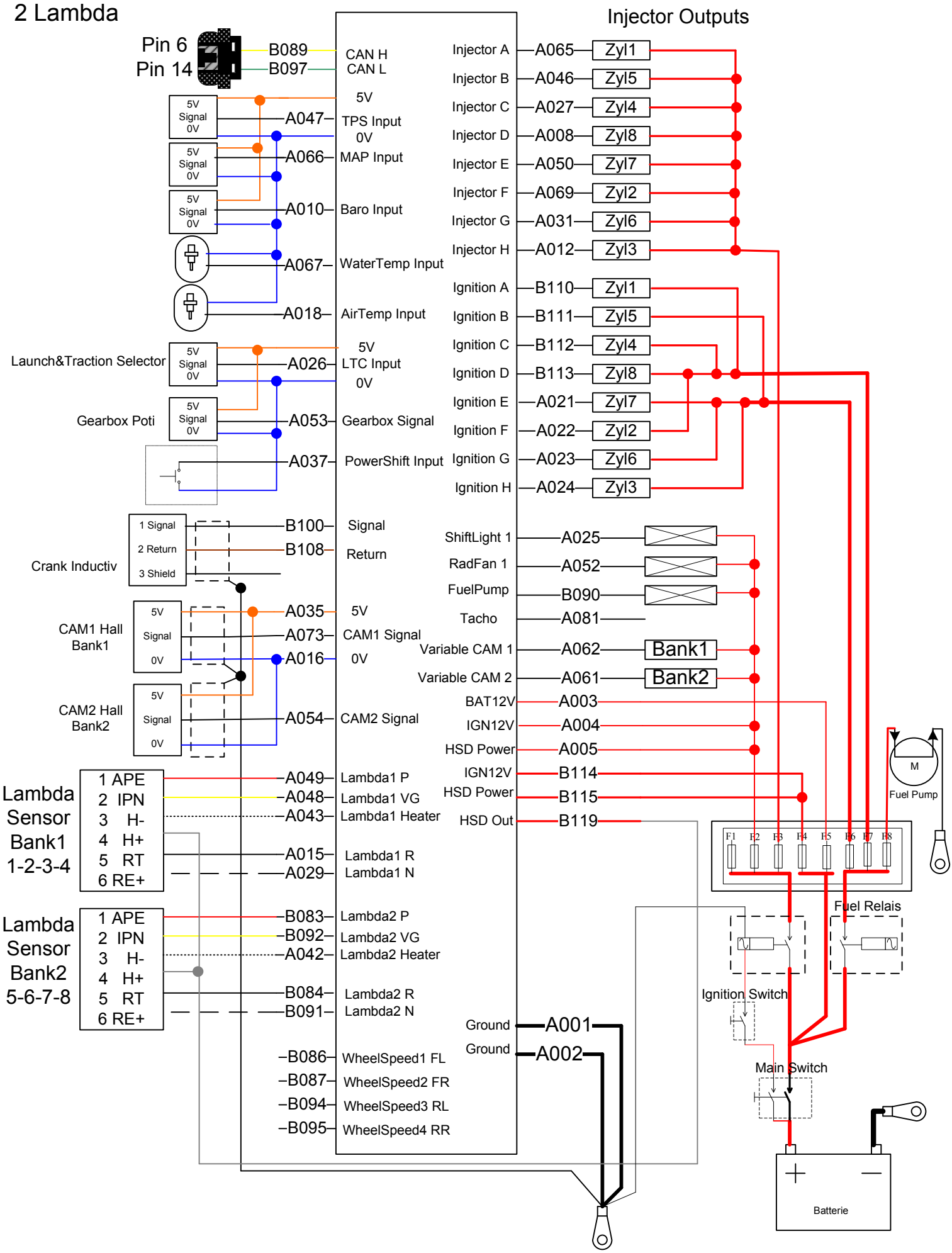MBE 9A9 internal Amps
8 Zylinder COP 1-5-4-8-7-2-6-3
BMW S65B40 V8
2 Lambda